ANALOG VS. DIGITAL

BACK

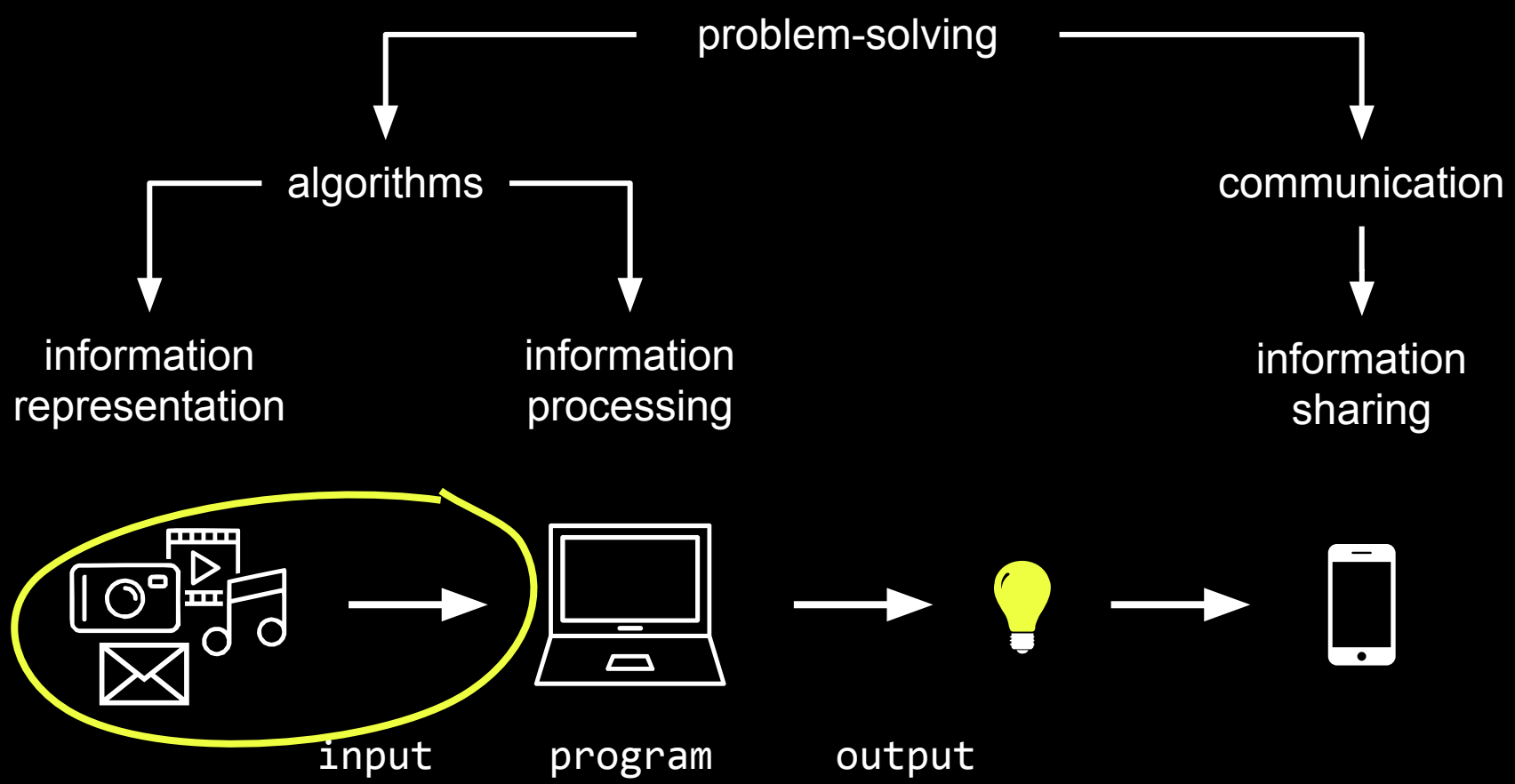
problem-solving
algorithms
communication
information representation
information processing
information sharing
input
program
output

where can you stand on each side?

where can you stand on each side?

where can you stand on each side?

where can you stand on each side?

where can you stand on each side?

CONTINUOUS

any level is possible

DISCRETE

only four different levels

analog and digital clocks

Image source: Wikipedia

Image source: Wikipedia

“Digitization is the representation of an object, image, sound, document or signal by generating a series of numbers that describe a discrete set of its points or samples”

analog-to-digital converter (ADC)

sampling → quantization → encoding

measuring of the analog signal

turning the measurement into a series of 1 and 0

encoding the series of numbers in binary and assign meaning

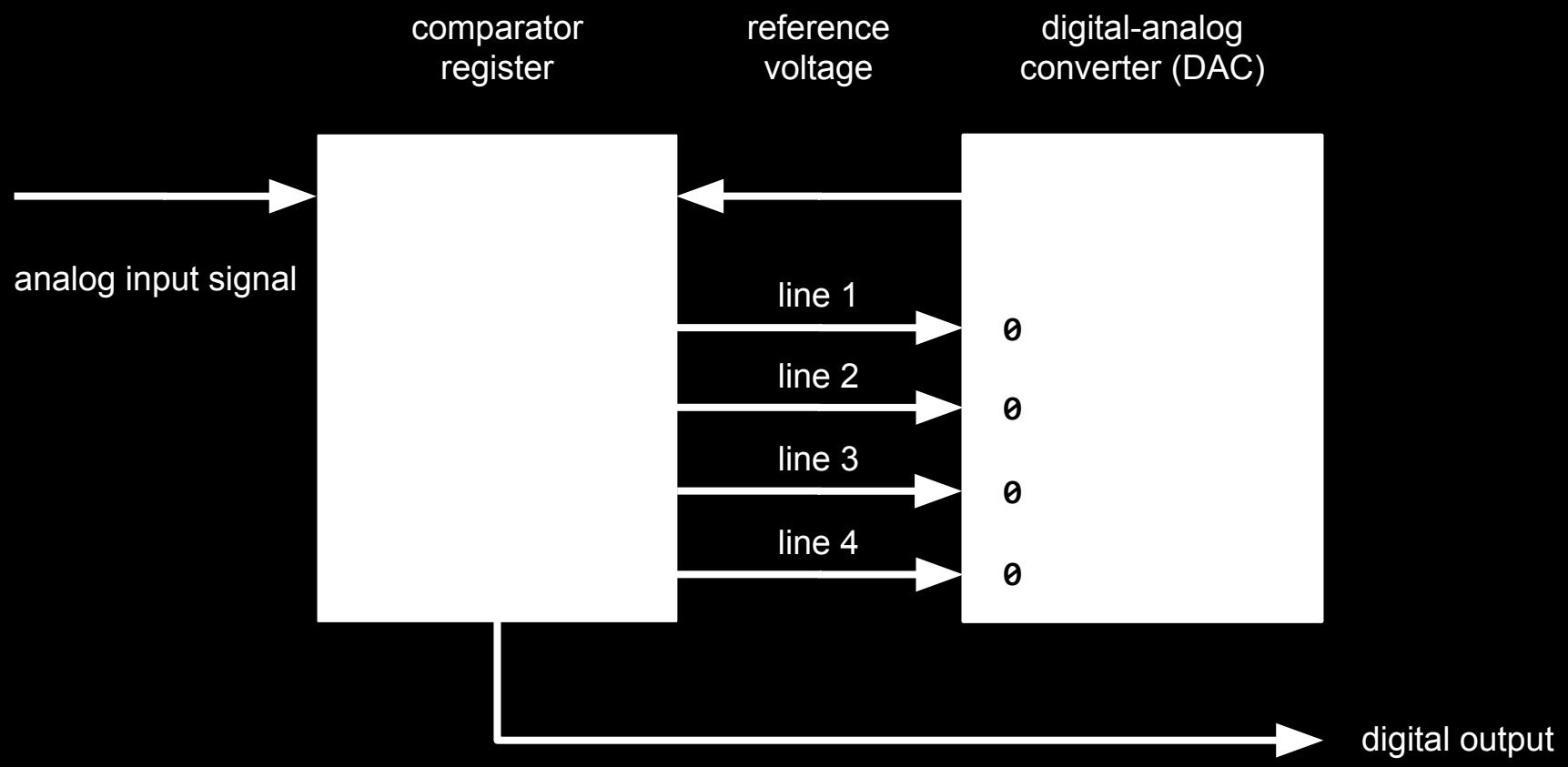
comparator
register
reference
voltage
digital-analog
converter (DAC)
analog input signal
line 1
line 2
line 3
line 4
0
0
0
0
digital output

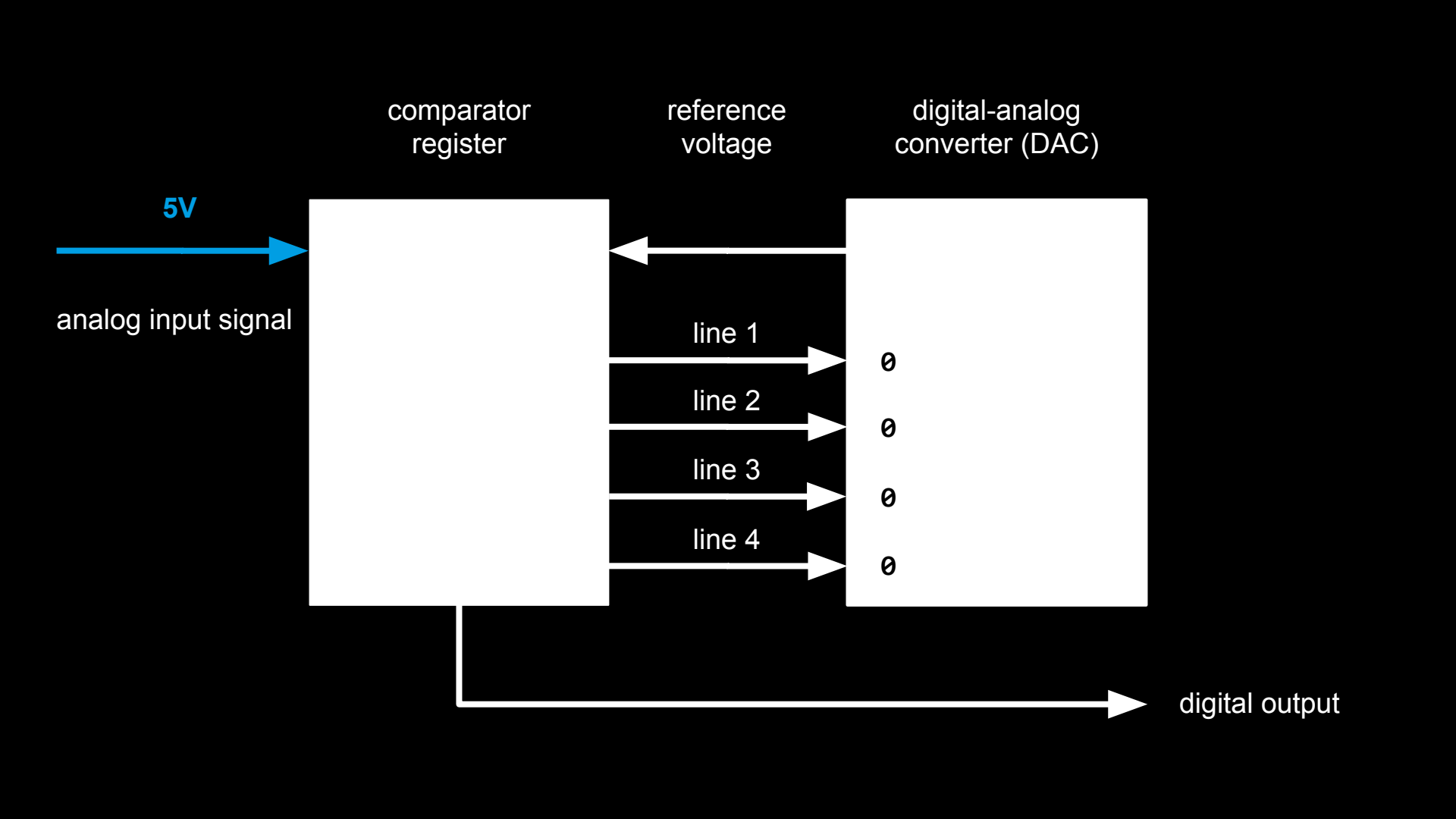
comparator
register
reference
voltage
digital-analog
converter (DAC)
5V
analog input signal
line 1
line 2
line 3
line 4
0
0
0
0
digital output

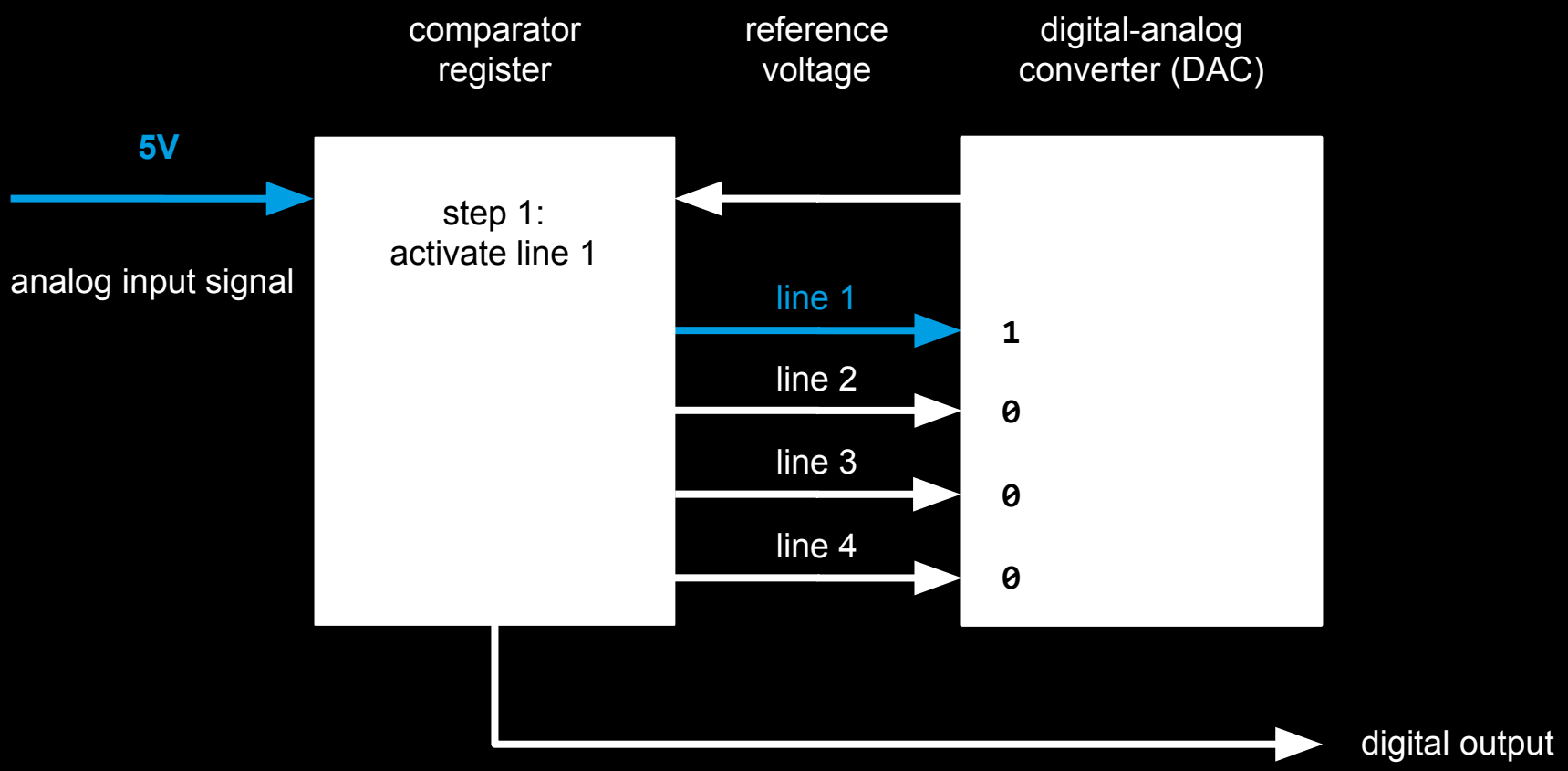
comparator
register
reference
voltage
digital-analog
converter (DAC)
5V
analog input signal
step 1:
activate line 1
line 1
line 2
line 3
line 4
1
0
0
0
digital output

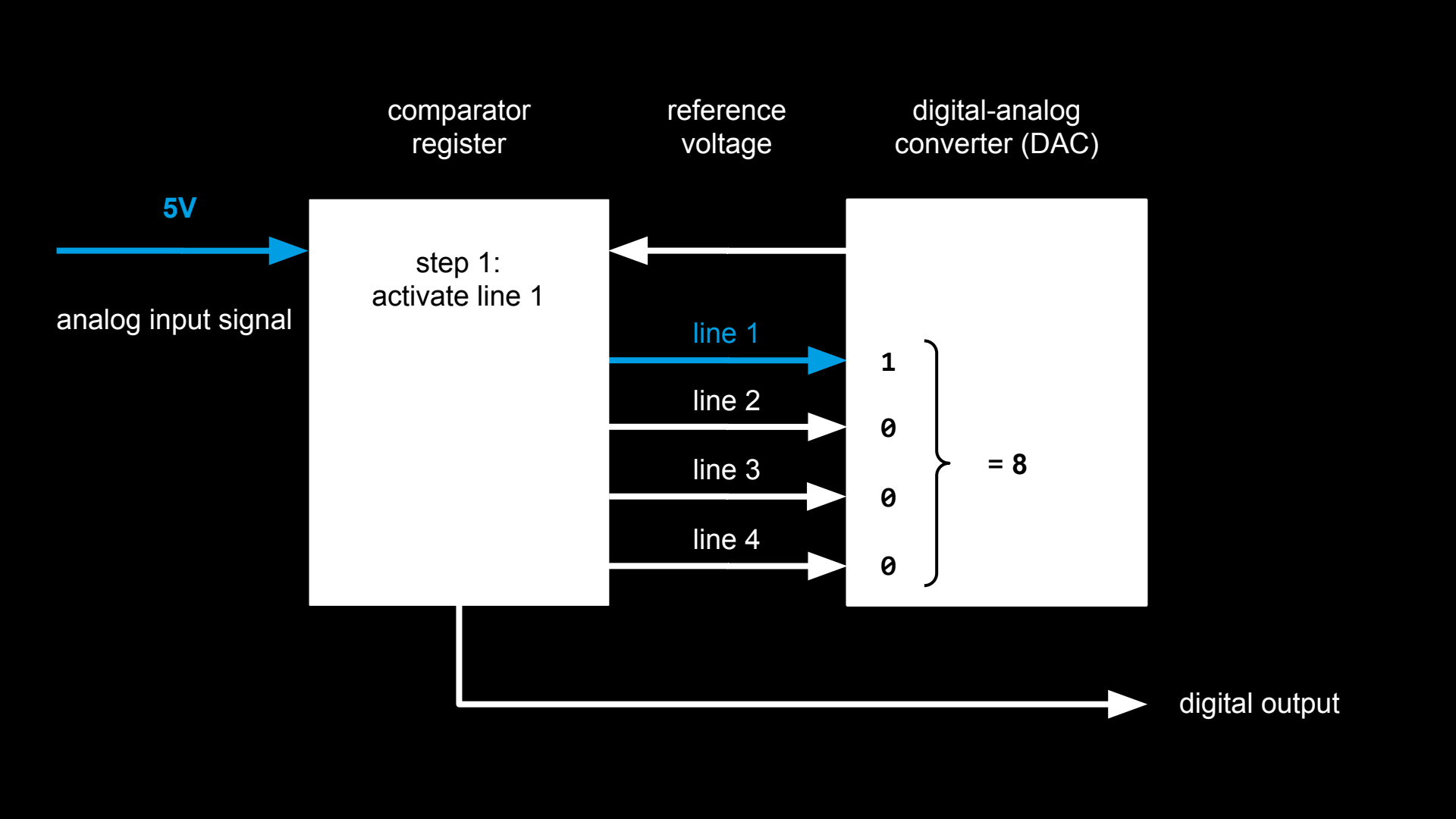
comparator
register
reference
voltage
digital-analog
converter (DAC)
5V
analog input signal
step 1:
activate line 1
line 1
line 2
line 3
line 4
1
0
0
0
= 8
digital output

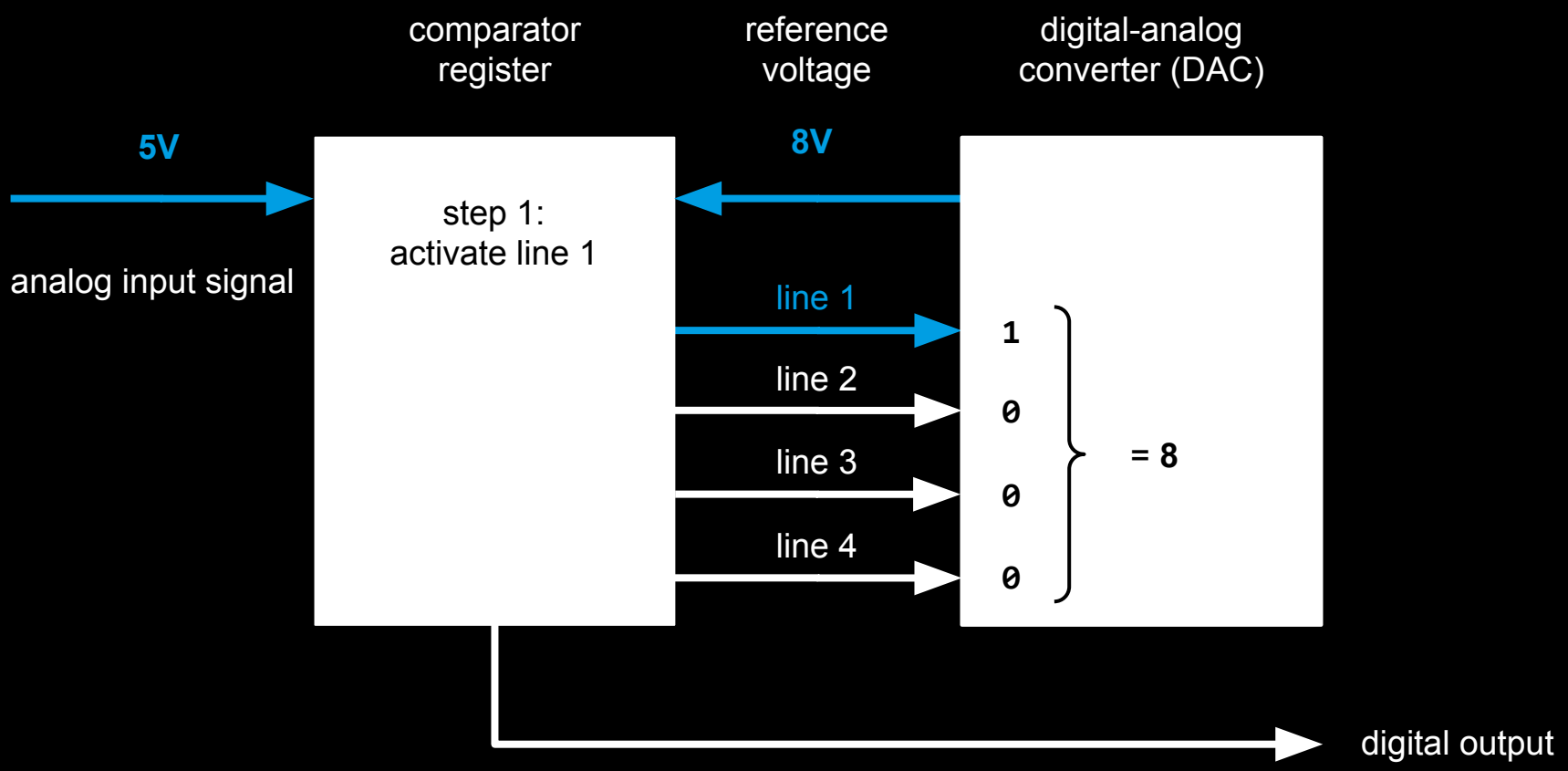
comparator
register
reference
voltage
digital-analog
converter (DAC)
5V
8V
step 1:
activate line 1
analog input signal
line 1
line 2
line 3
line 4
1
0
0
0
= 8
digital output

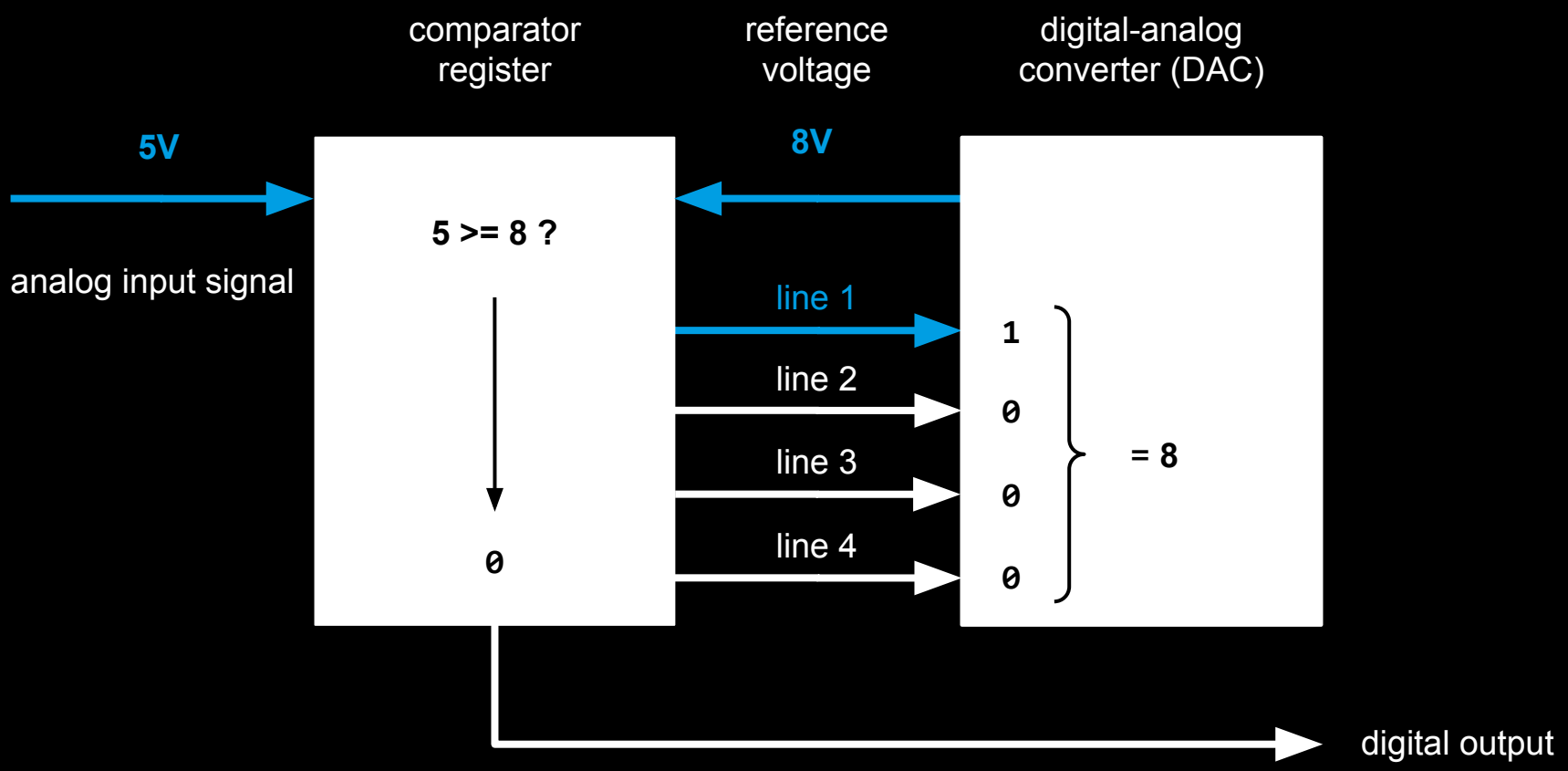
comparator
register
reference
voltage
digital-analog
converter (DAC)
5V
8V
5 >= 8 ?
analog input signal
line 1
line 2
line 3
line 4
1
0
0
0
= 8
0
digital output

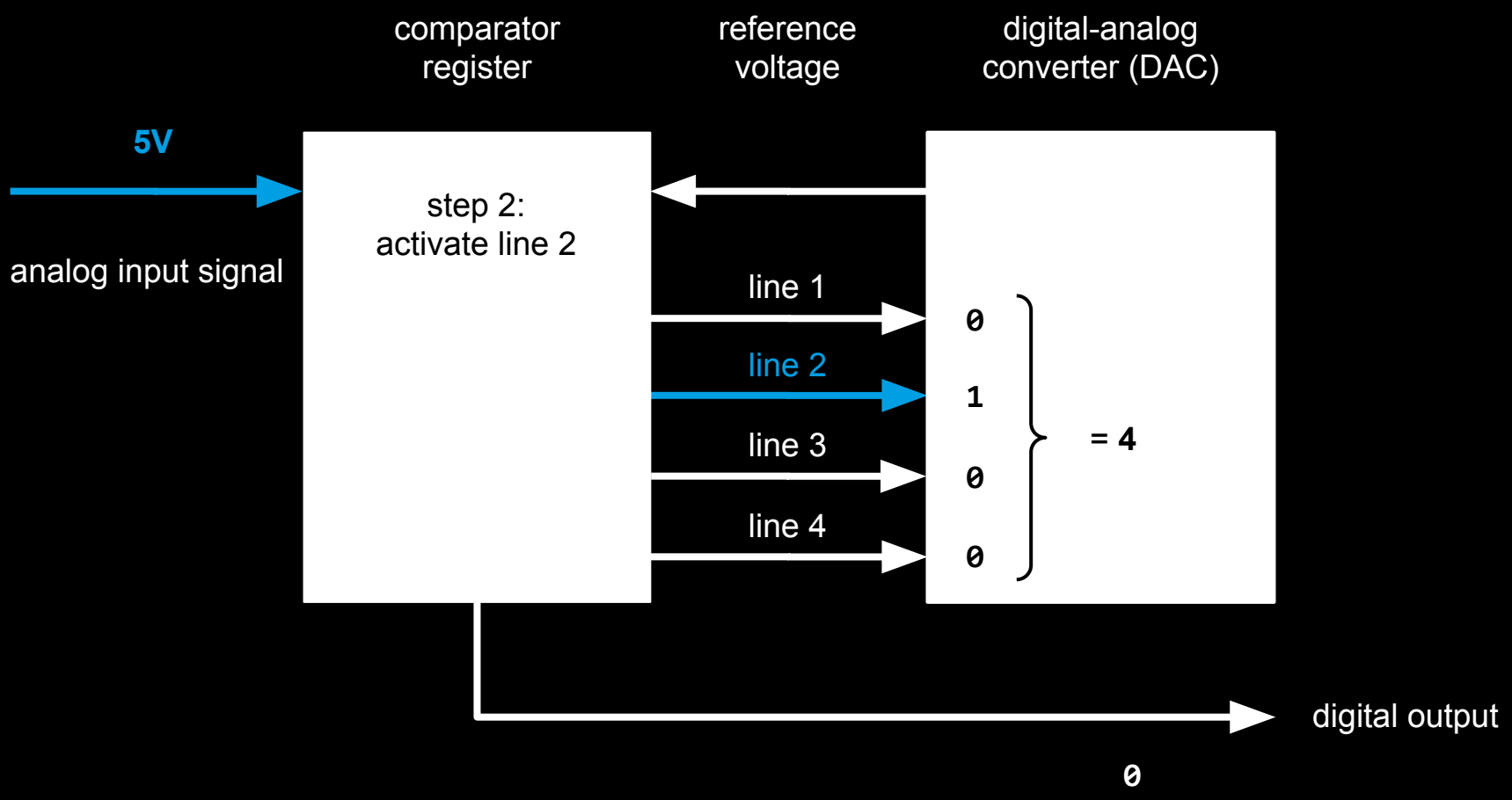
comparator register
reference voltage
digital-analog converter (DAC)
5V
analog input signal
step 2:
activate line 2
line 1
line 2
line 3
line 4
0
1
0
0
= 4
digital output
0

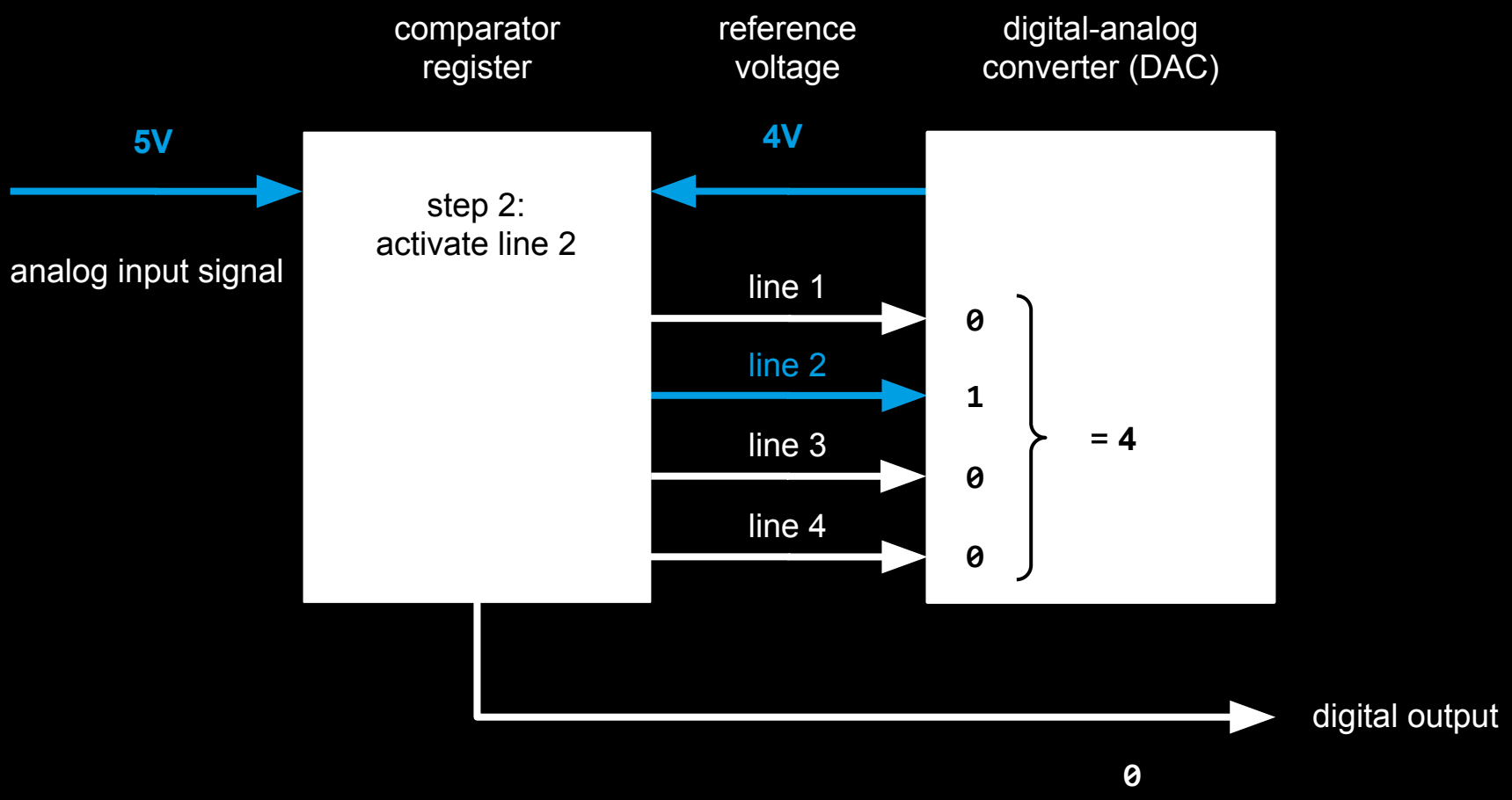
comparator
register
reference
voltage
digital-analog
converter (DAC)
5V
4V
step 2:
activate line 2
analog input signal
line 1
line 2
line 3
line 4
0
1
0
0
= 4
digital output
0

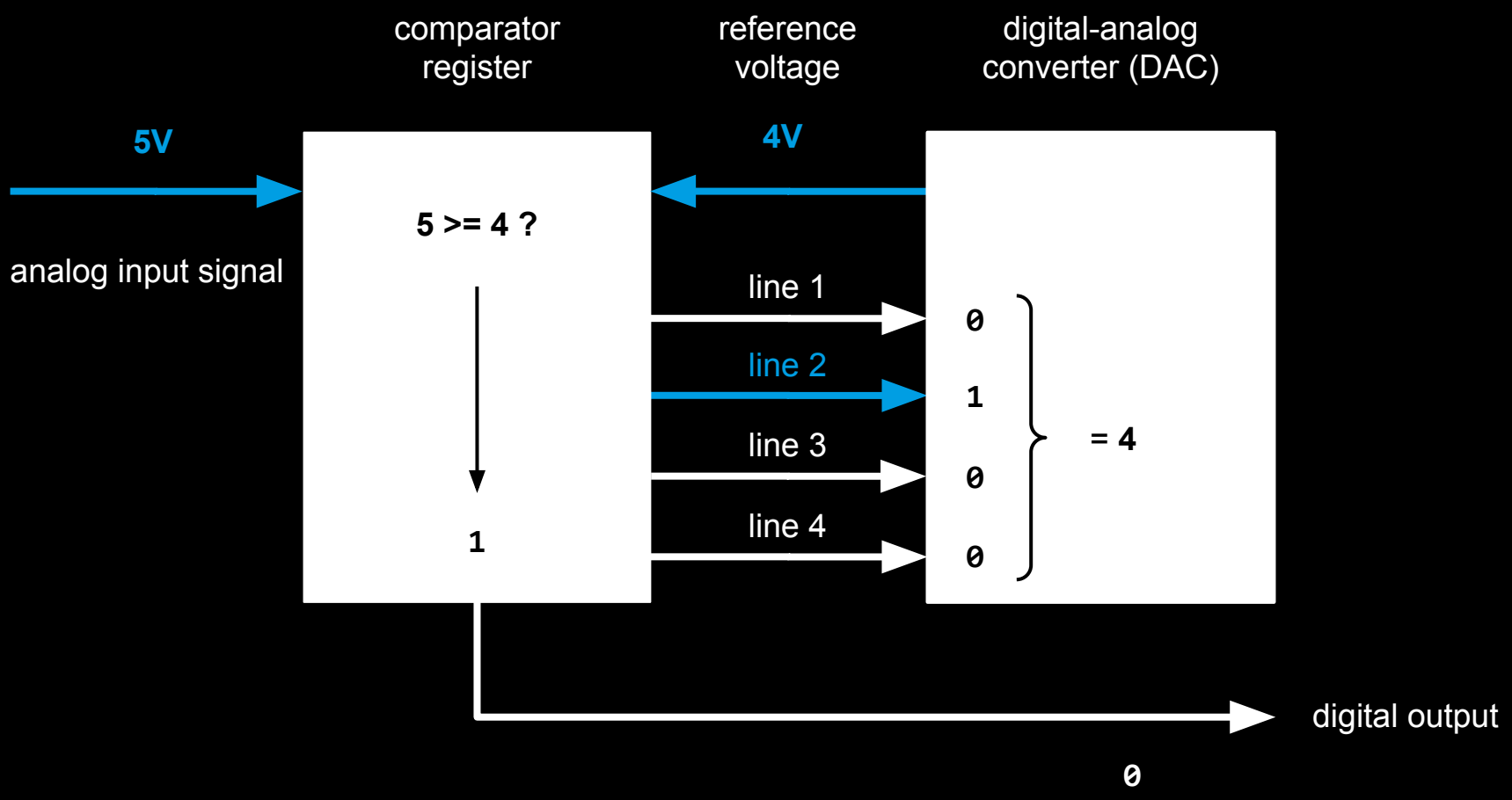
comparator
register
reference
voltage
digital-analog
converter (DAC)
5V
4V
5 >= 4 ?
analog input signal
line 1
line 2
line 3
line 4
0
1
0
0
= 4
1
digital output
0

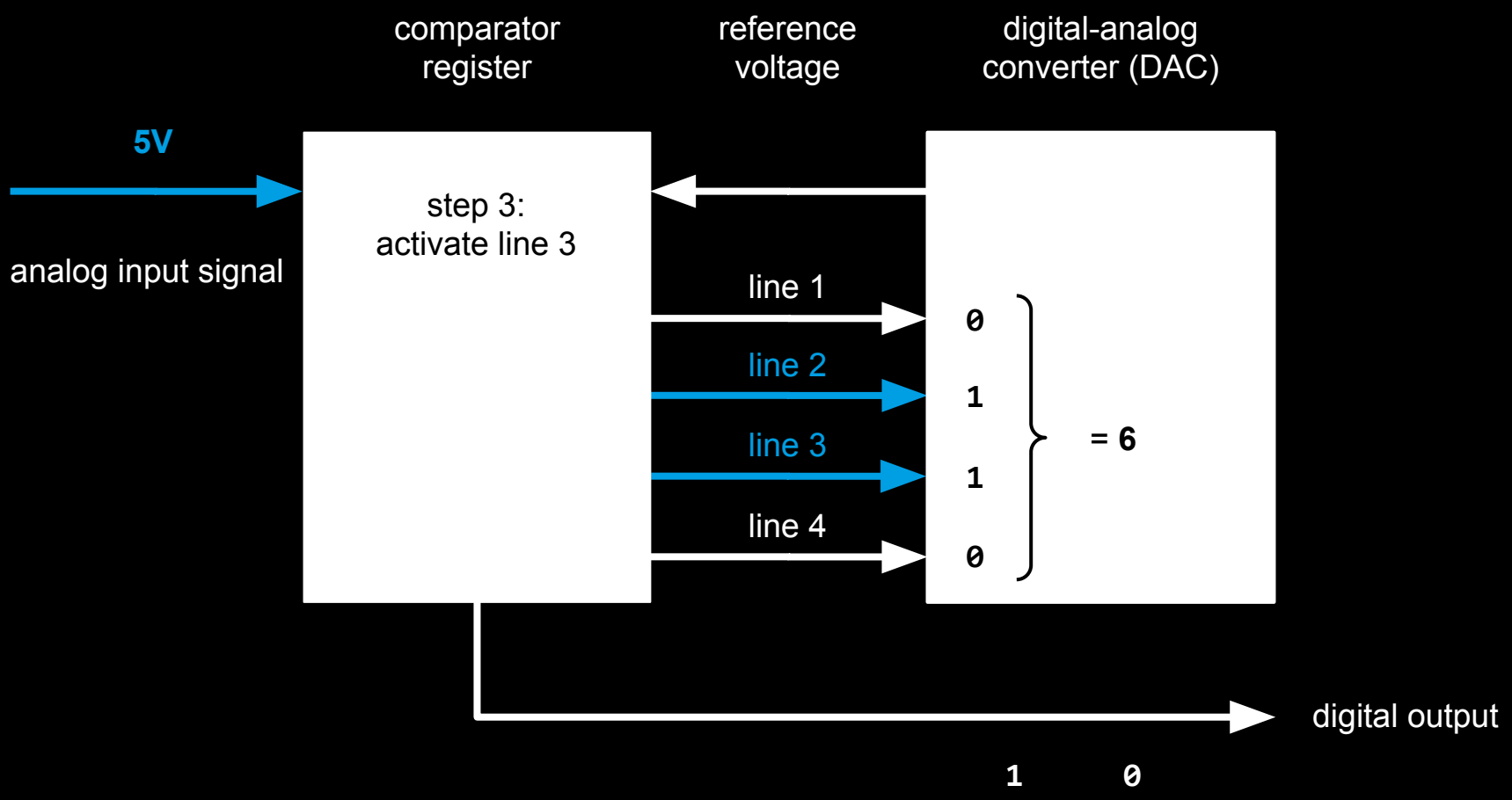
comparator
register
reference
voltage
digital-analog
converter (DAC)
5V
analog input signal
step 3:
activate line 3
line 1
line 2
line 3
line 4
0
1
1
0
= 6
digital output
1
0

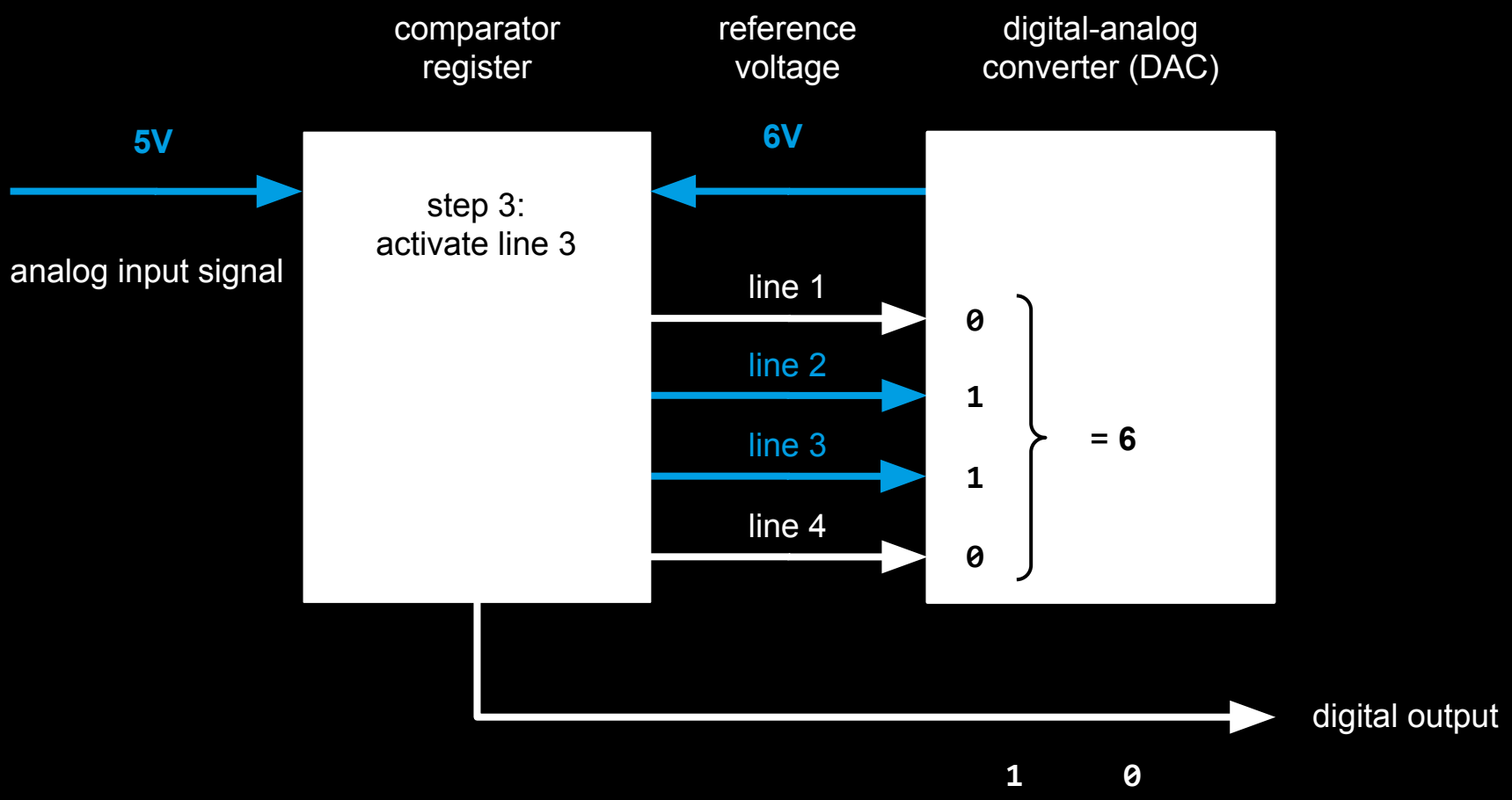
comparator
register
reference
voltage
digital-analog
converter (DAC)
5V
6V
step 3:
activate line 3
analog input signal
line 1
line 2
line 3
line 4
0
1
1
0
= 6
digital output
1
0

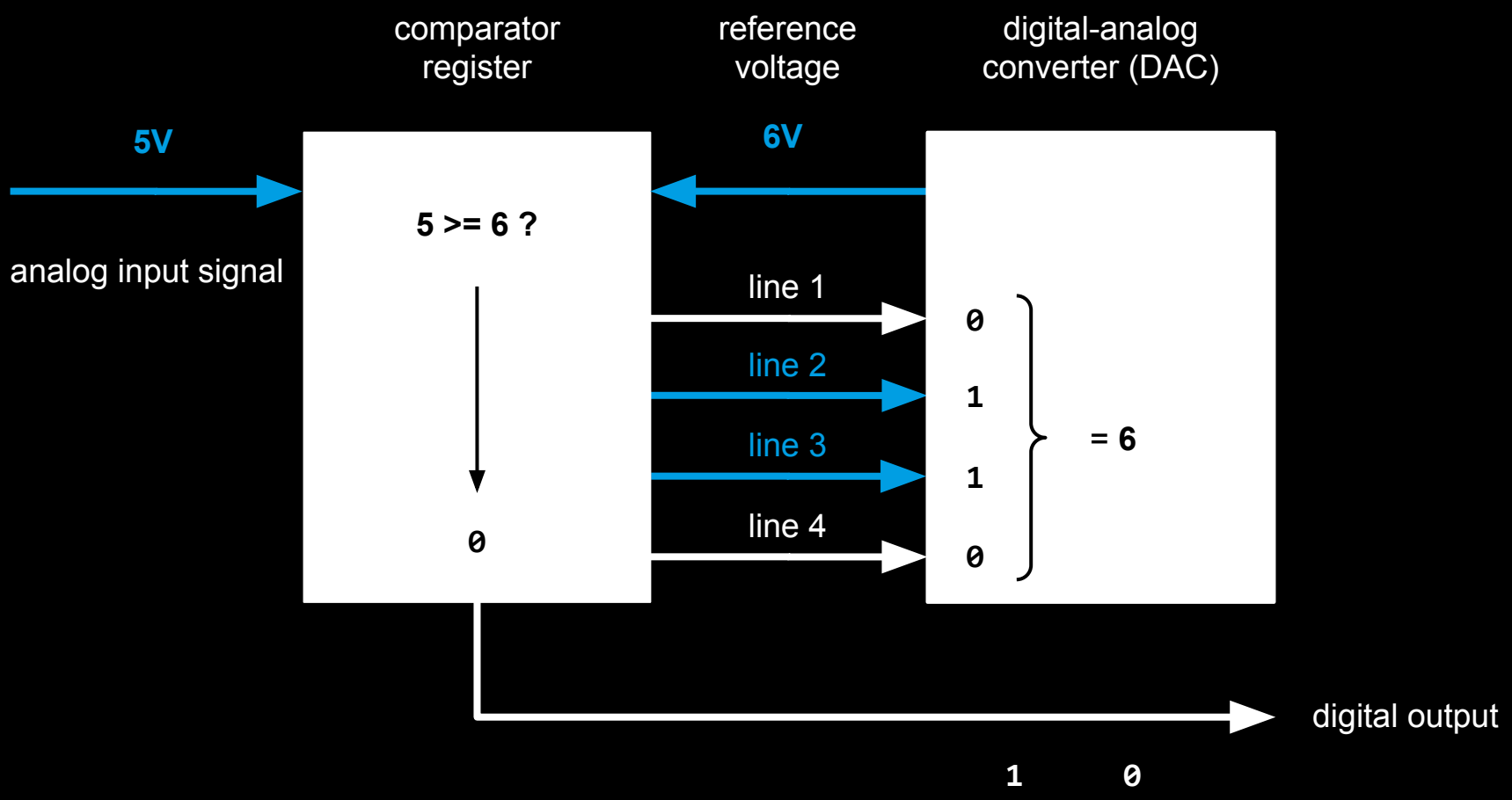
comparator
register
reference
voltage
digital-analog
converter (DAC)
5V
6V
5 >= 6 ?
analog input signal
line 1
line 2
line 3
line 4
0
0
1
1
0
= 6
digital output
1
0

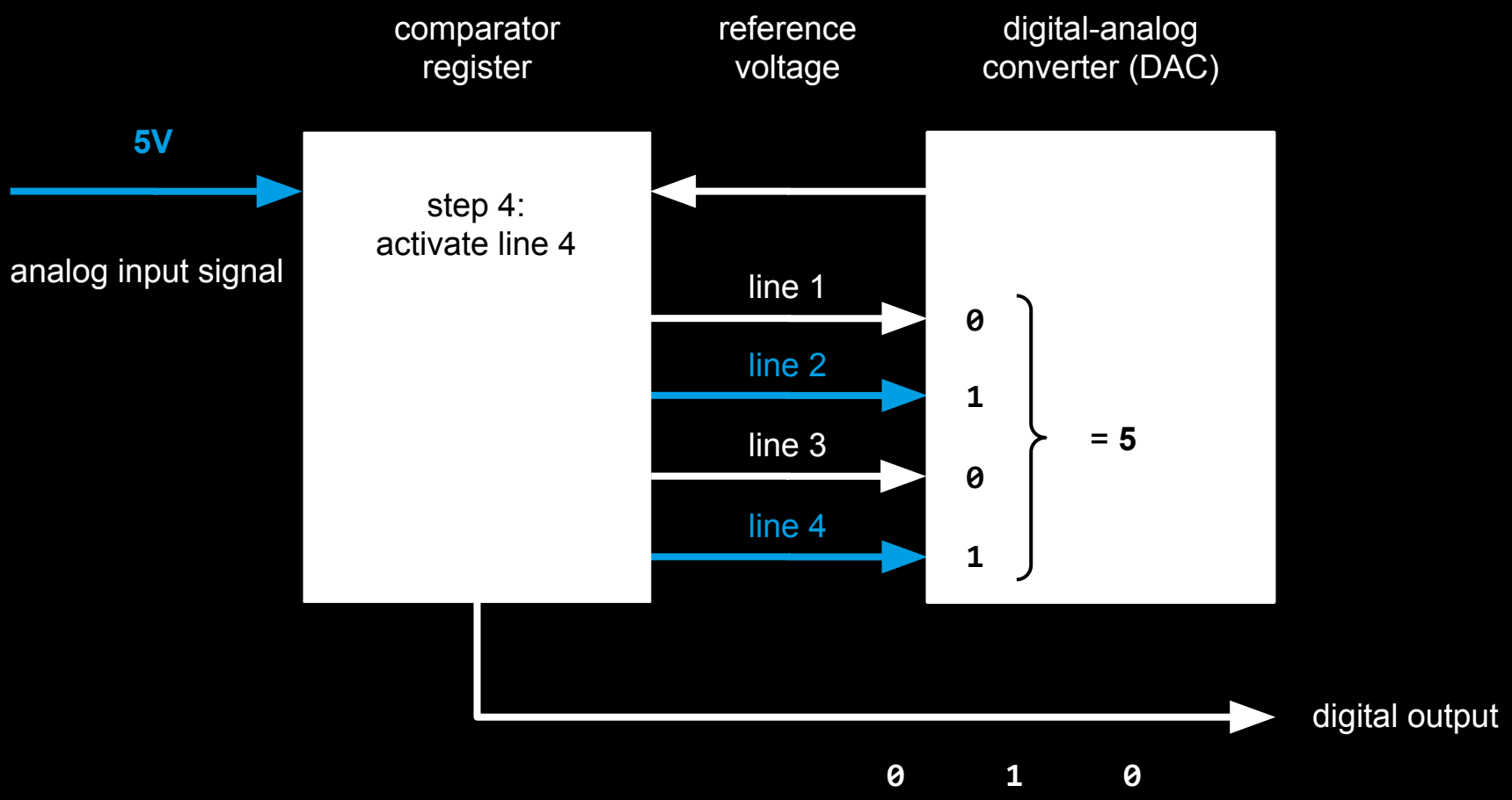
comparator
register
reference
voltage
digital-analog
converter (DAC)
5V
analog input signal
step 4:
activate line 4
line 1
line 2
line 3
line 4
0
1
0
1
= 5
digital output
0 1 0

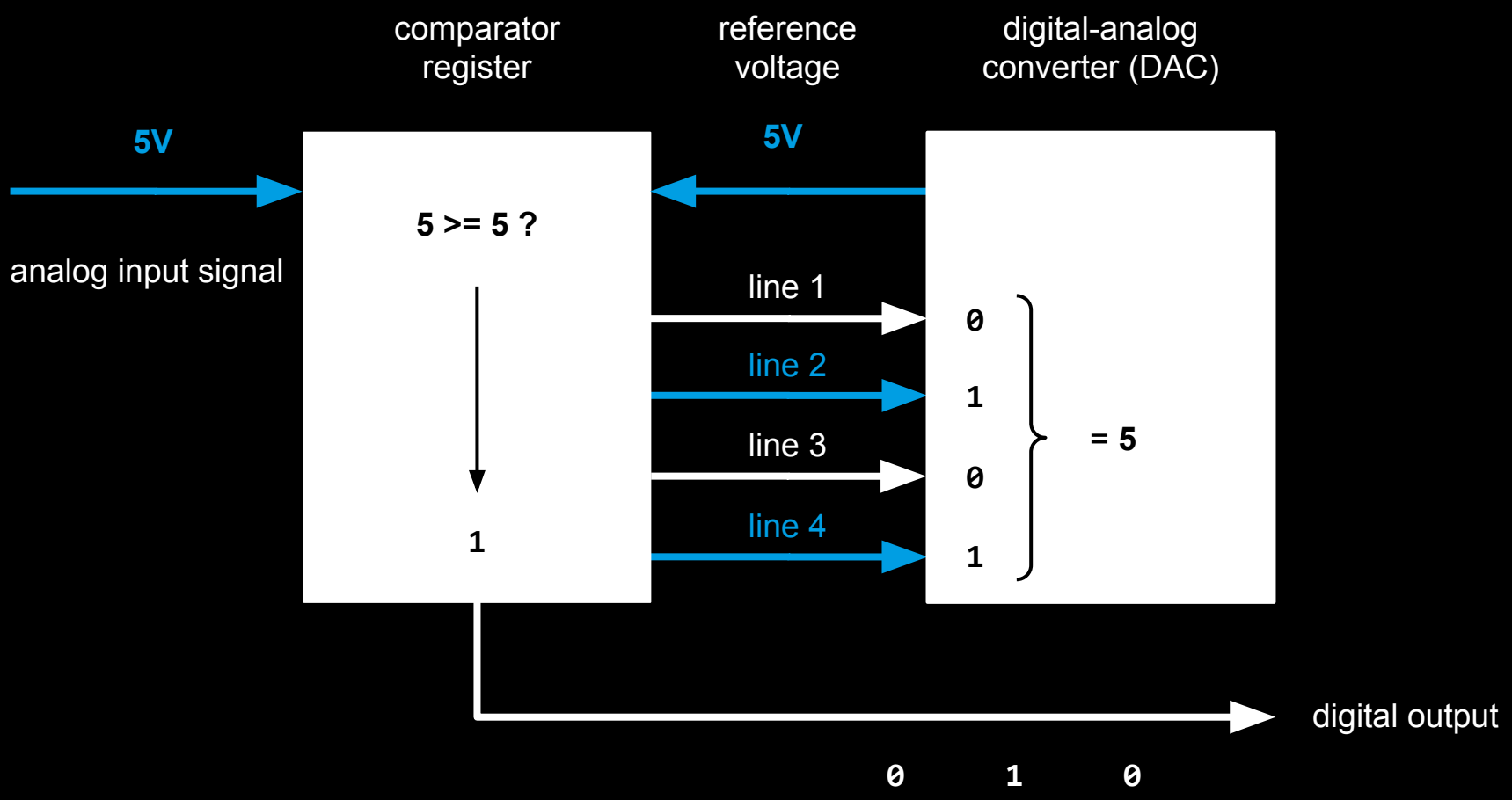
comparator
register
reference
voltage
digital-analog
converter (DAC)
5V
5V
analog input signal
5 >= 5 ?
1
line 1
line 2
line 3
line 4
0
1
0
1
= 5
digital output
0 1 0

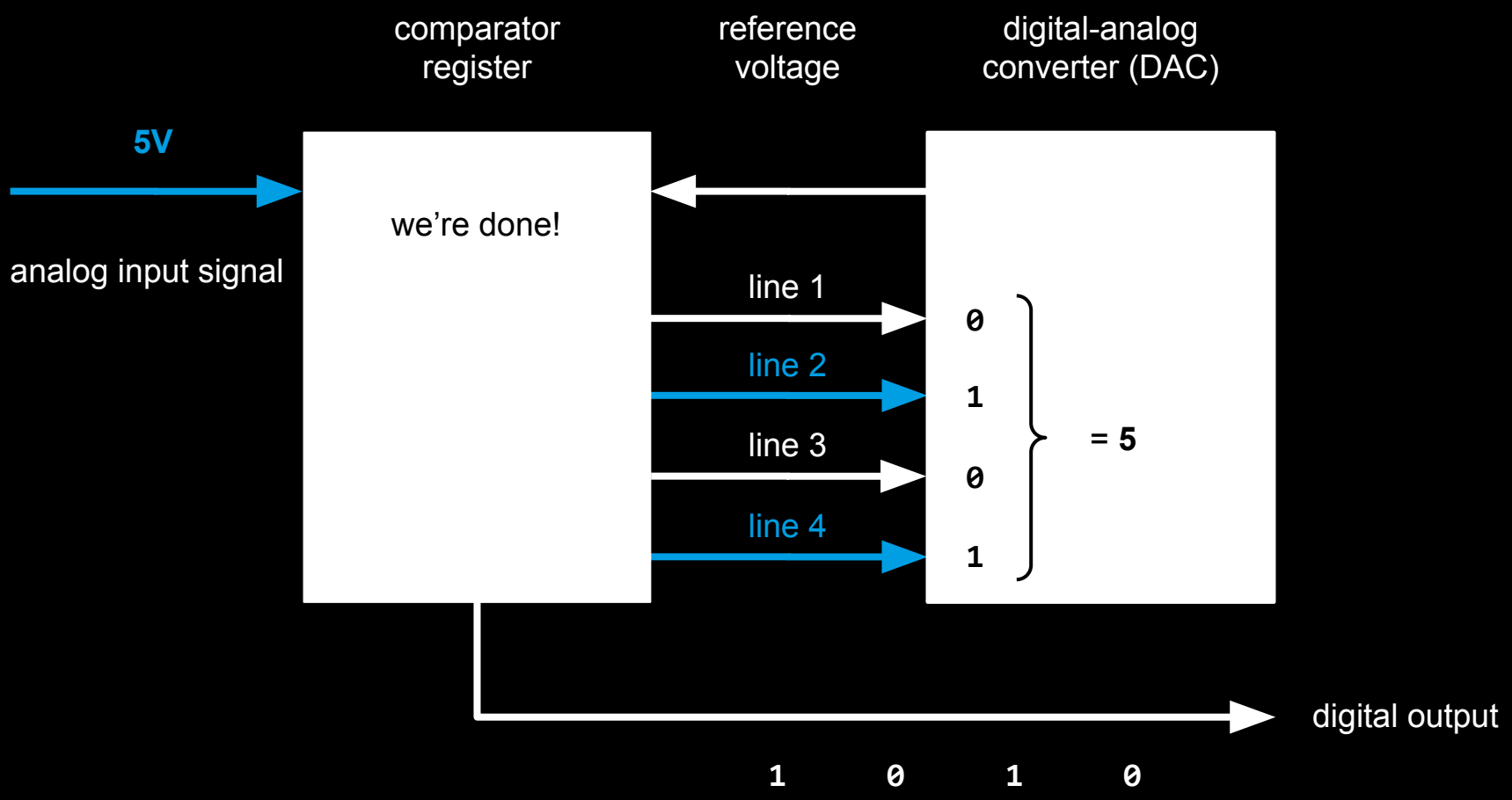
comparator
register
reference
voltage
digital-analog
converter (DAC)
5V
analog input signal
we're done!
line 1
line 2
line 3
line 4
0
1
0
1
= 5
digital output
1 0 1 0

so, what analog signal is measured?

A **continuous** wave is transformed into an array of **discrete numbers** representing pressure.

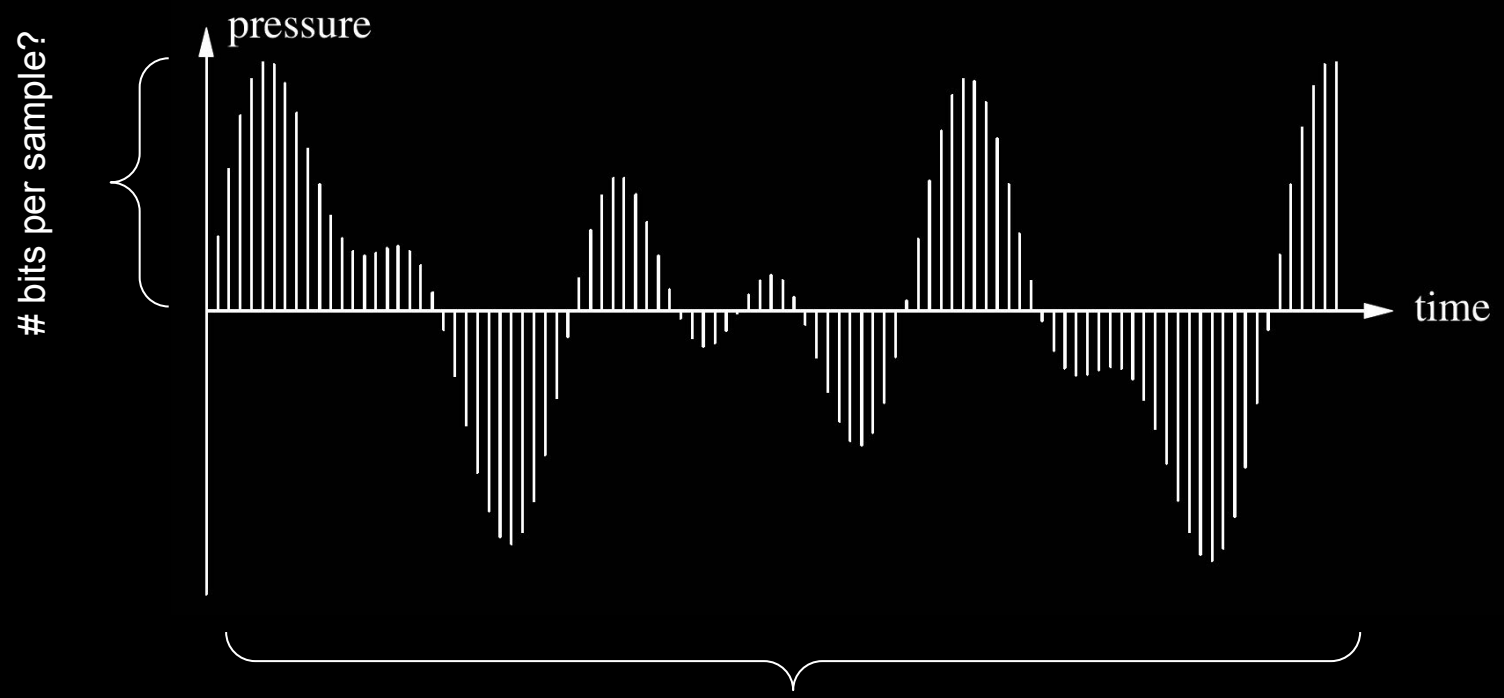

image sensor

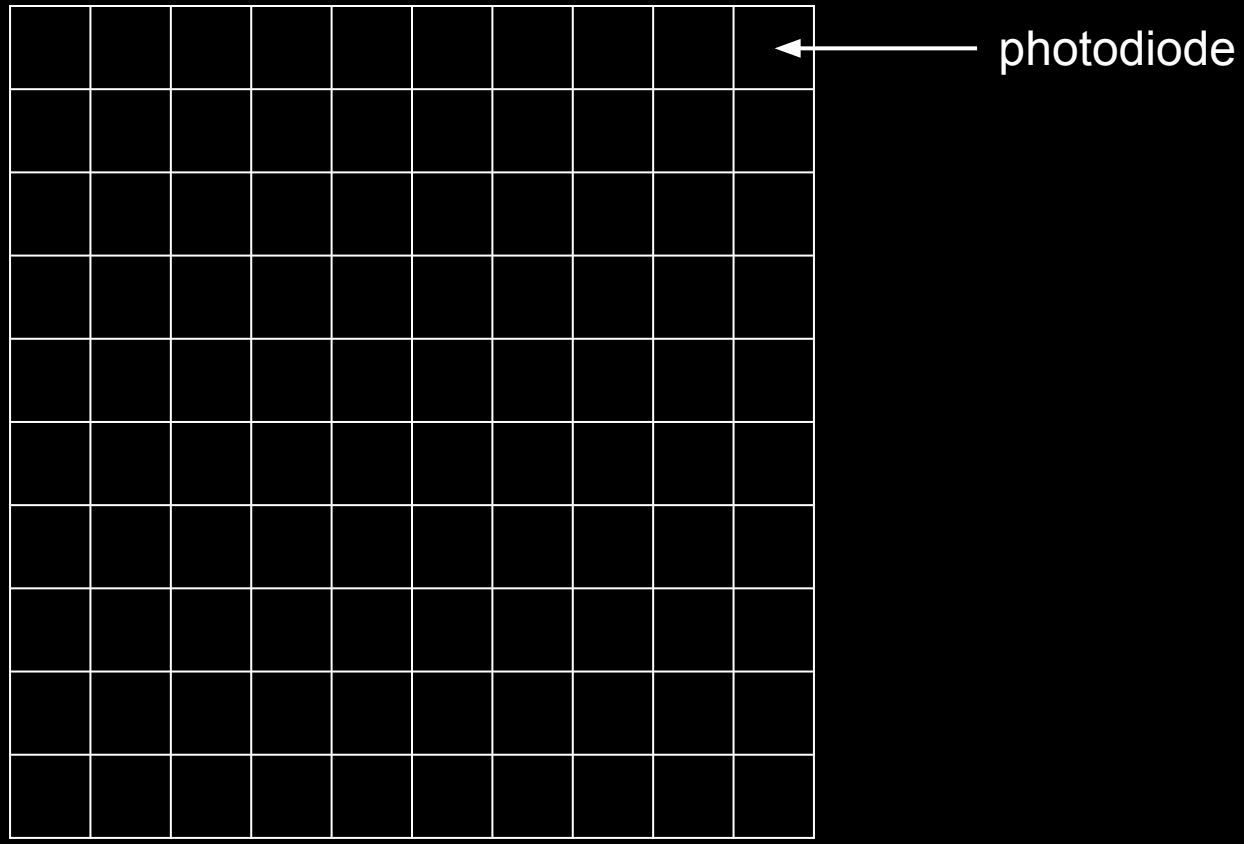

image sensor

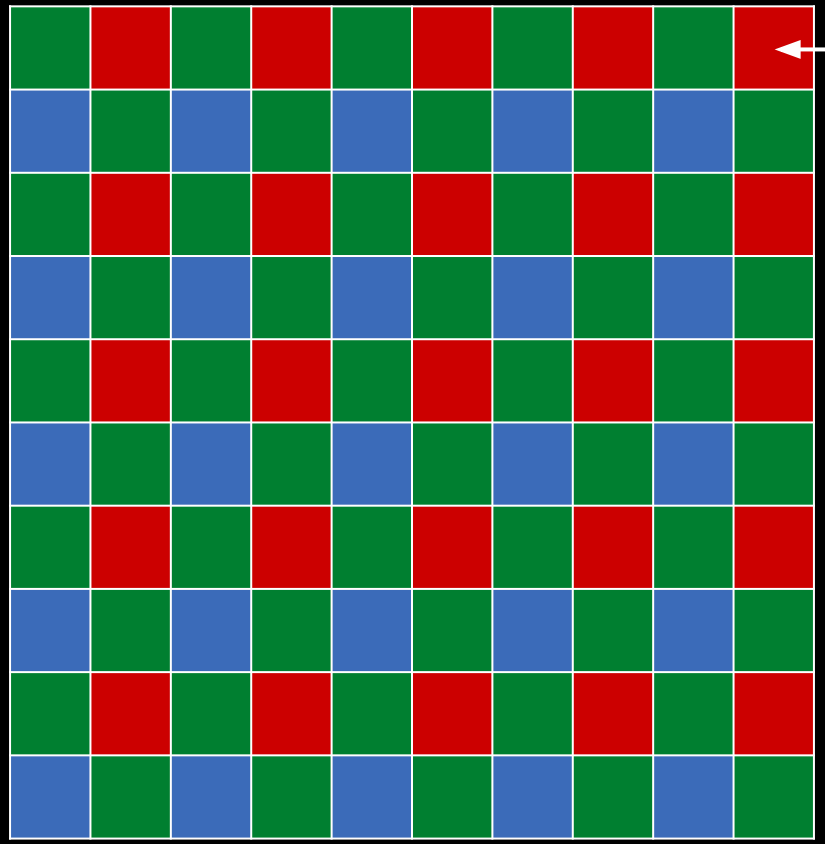

color filter on top of photo-diodes

image sensor

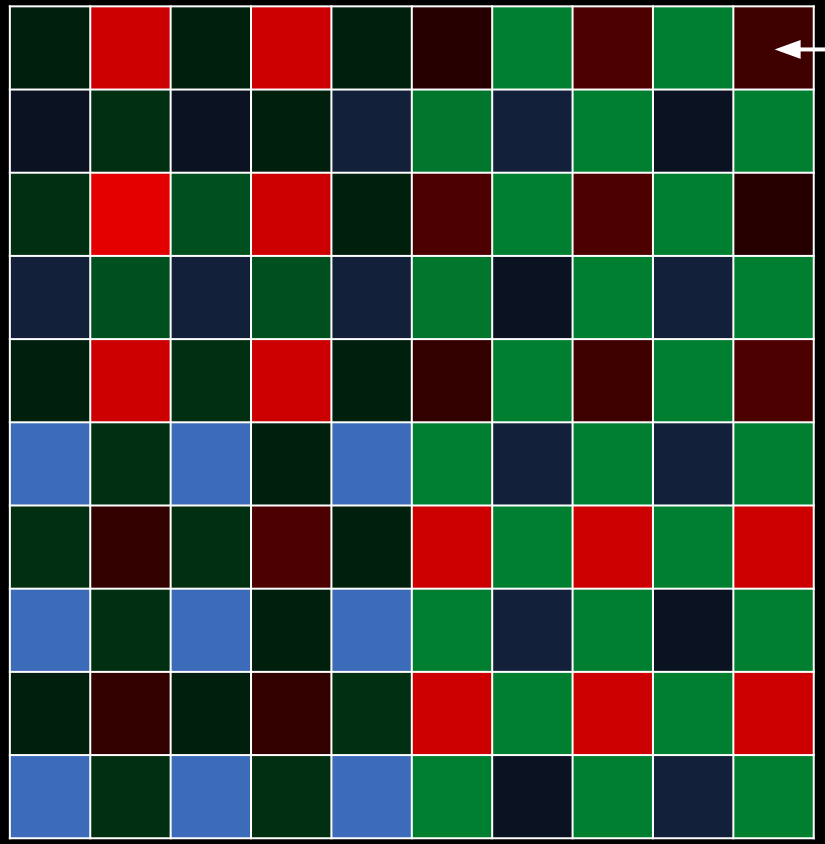

light passed through filter

image sensor

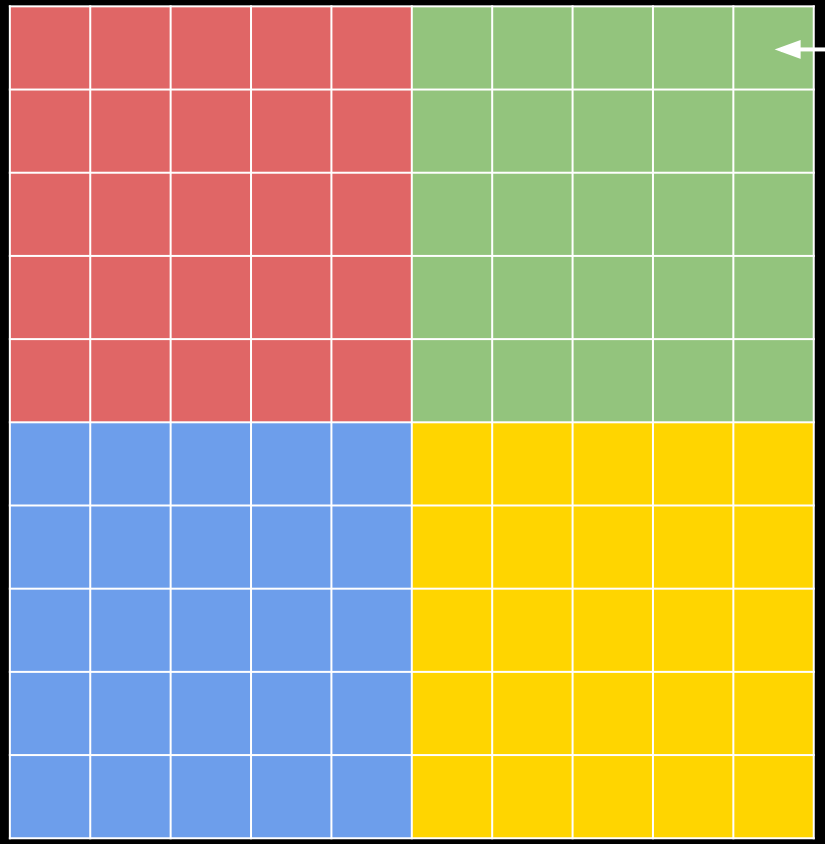

de-mosaiced
pixel colors

image sensor

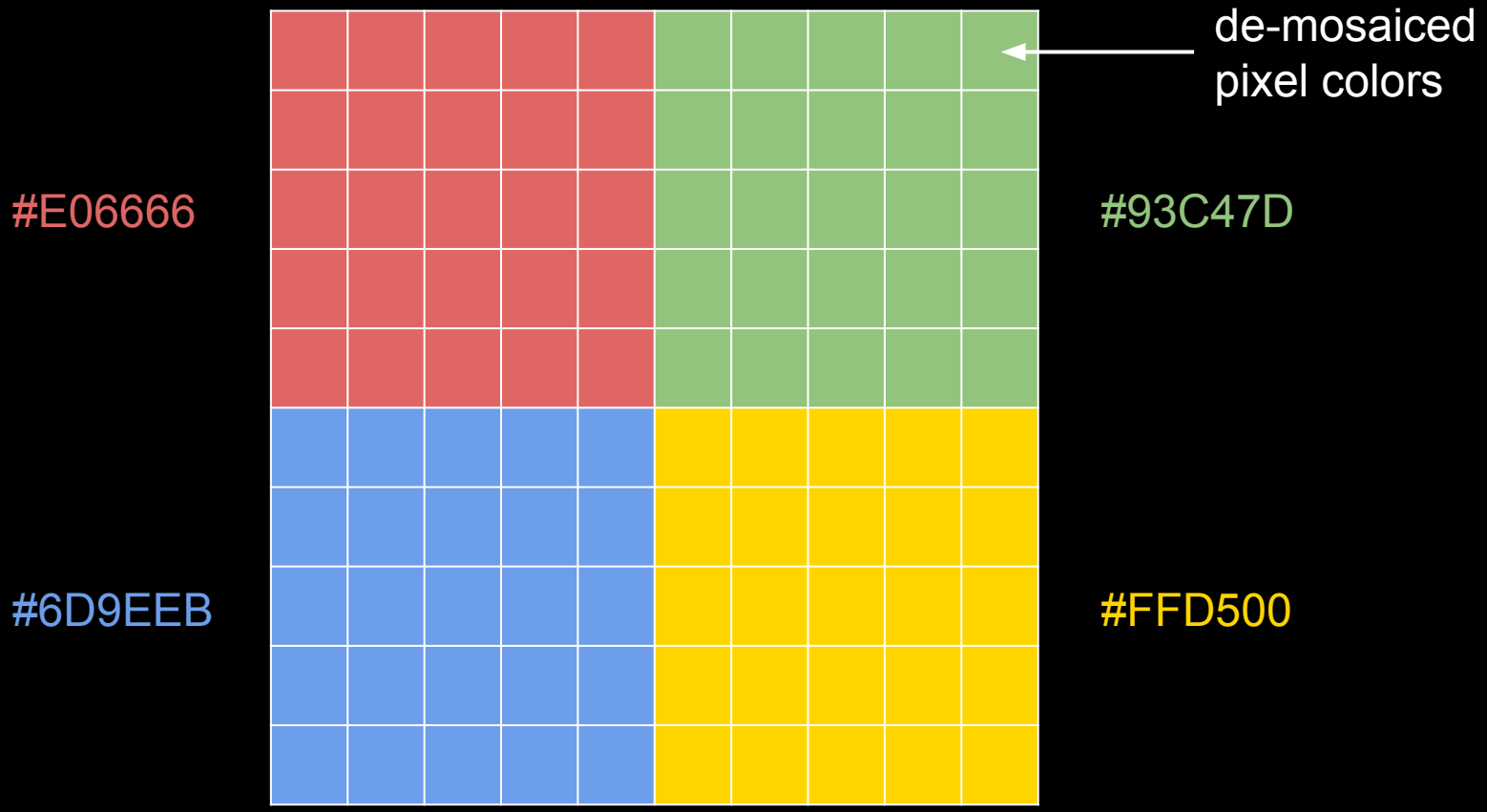

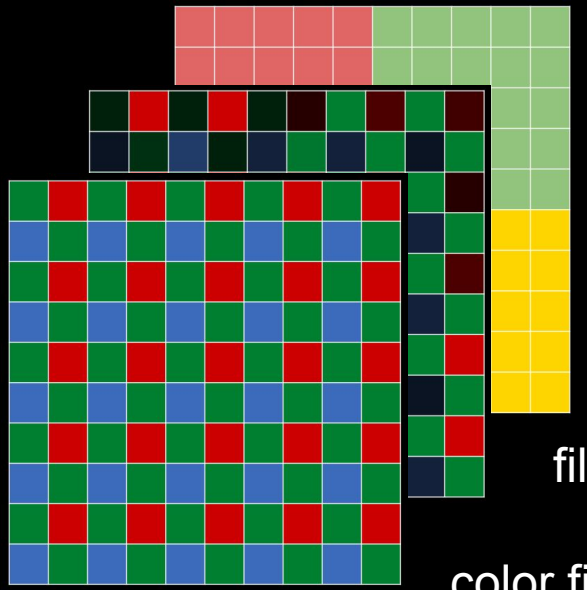
de-mosaiced pixel colors
filtered light
color filter

typing text

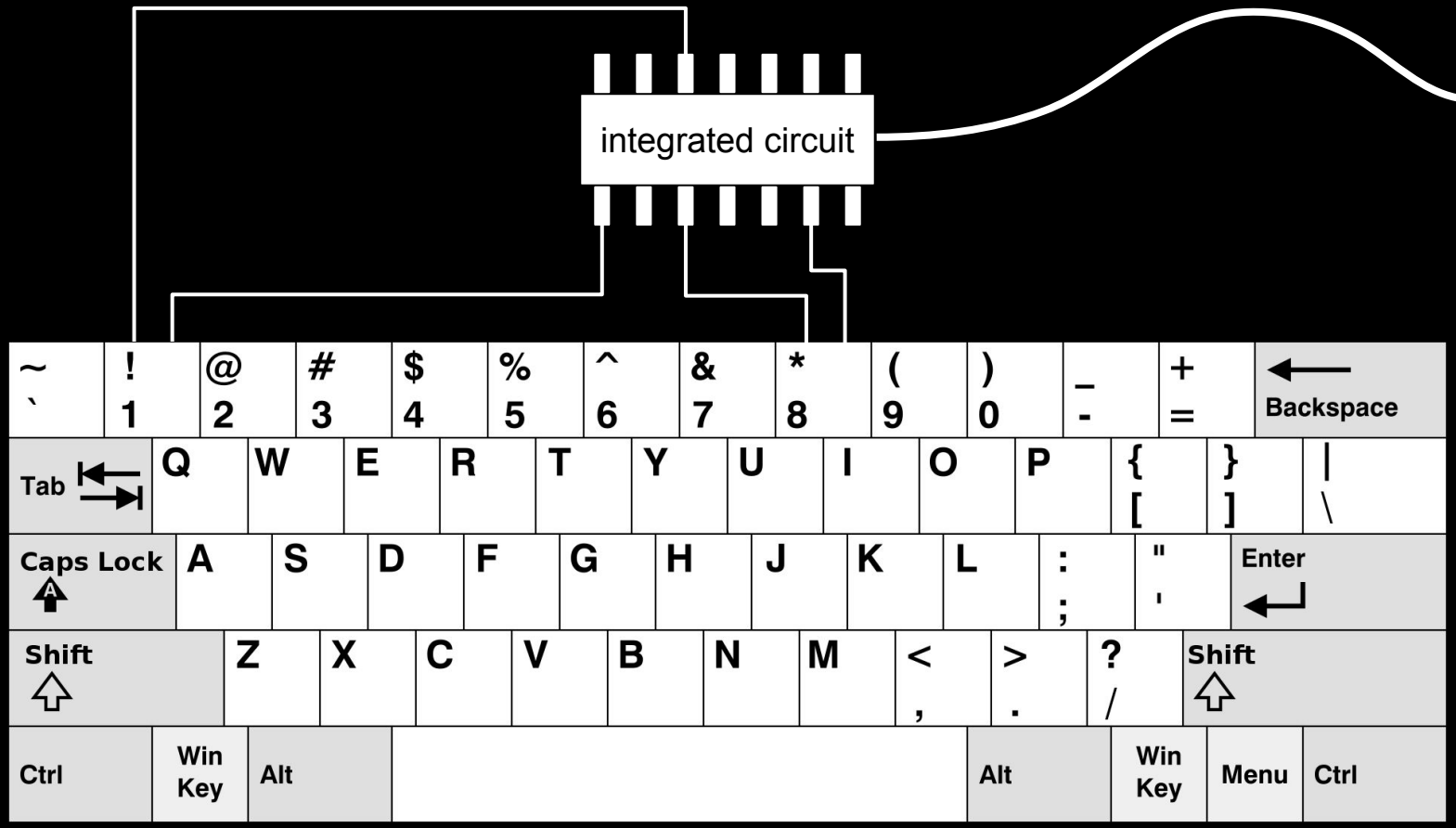

Image source: Wikipedia

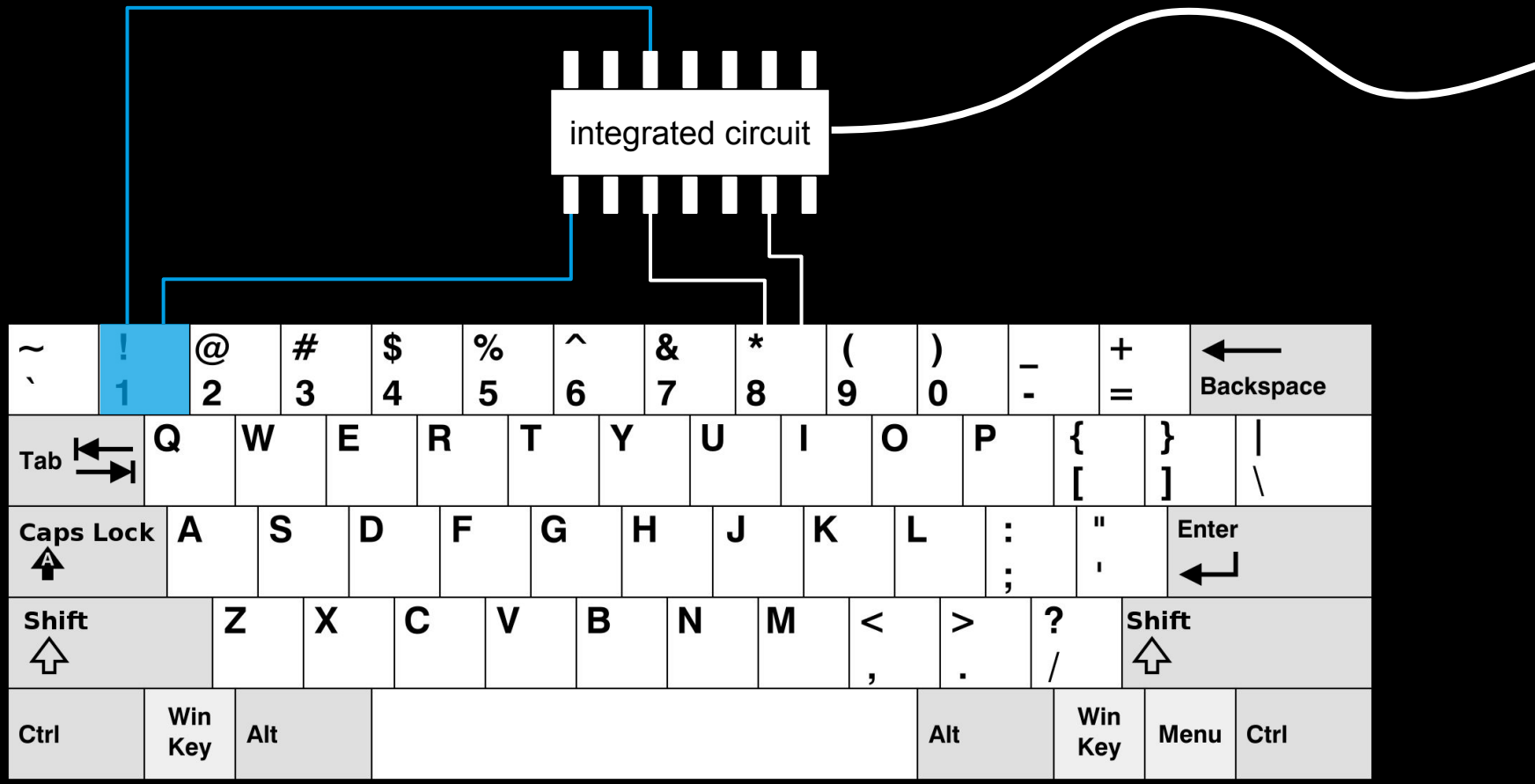

Image source: Wikipedia

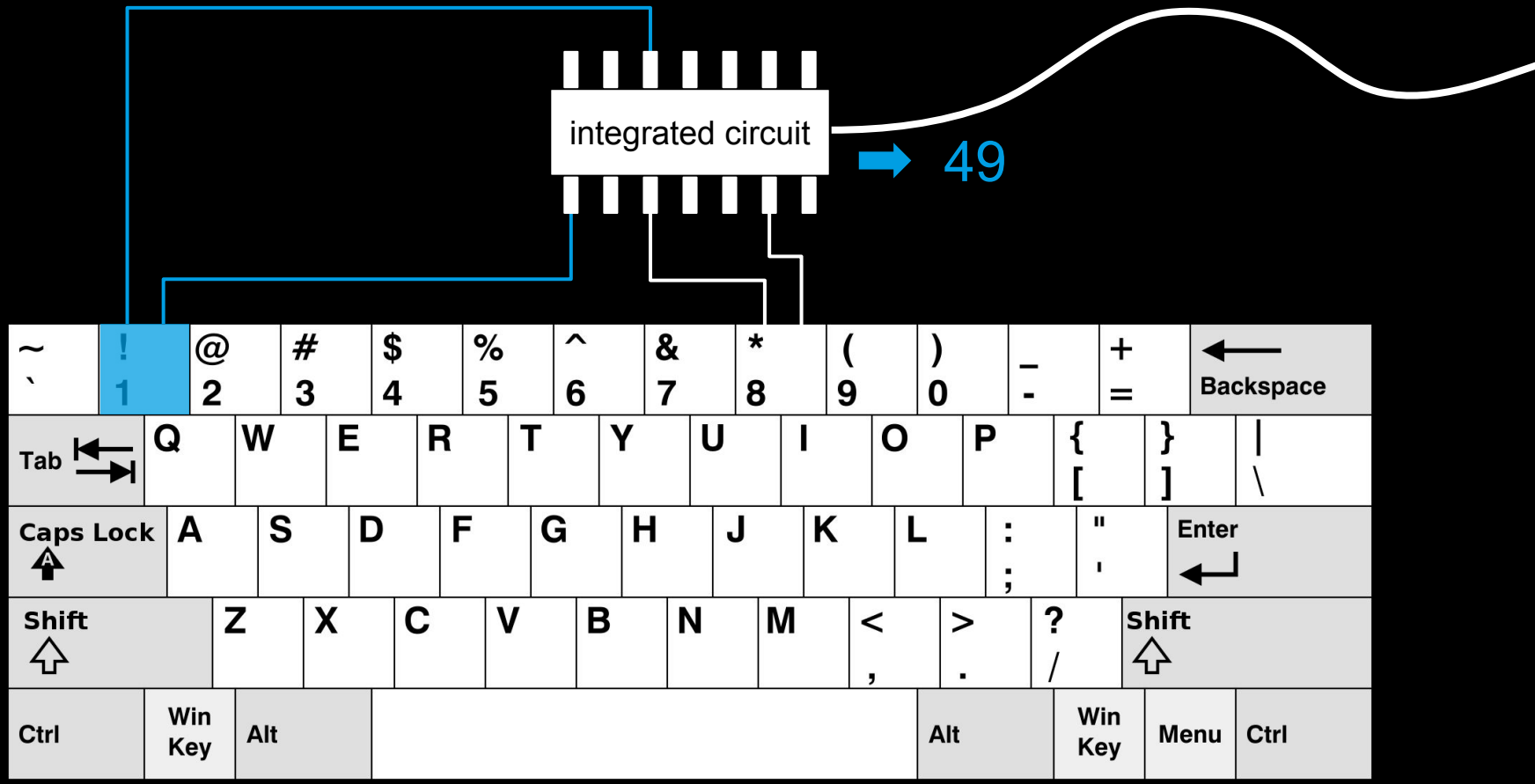

Image source: Wikipedia

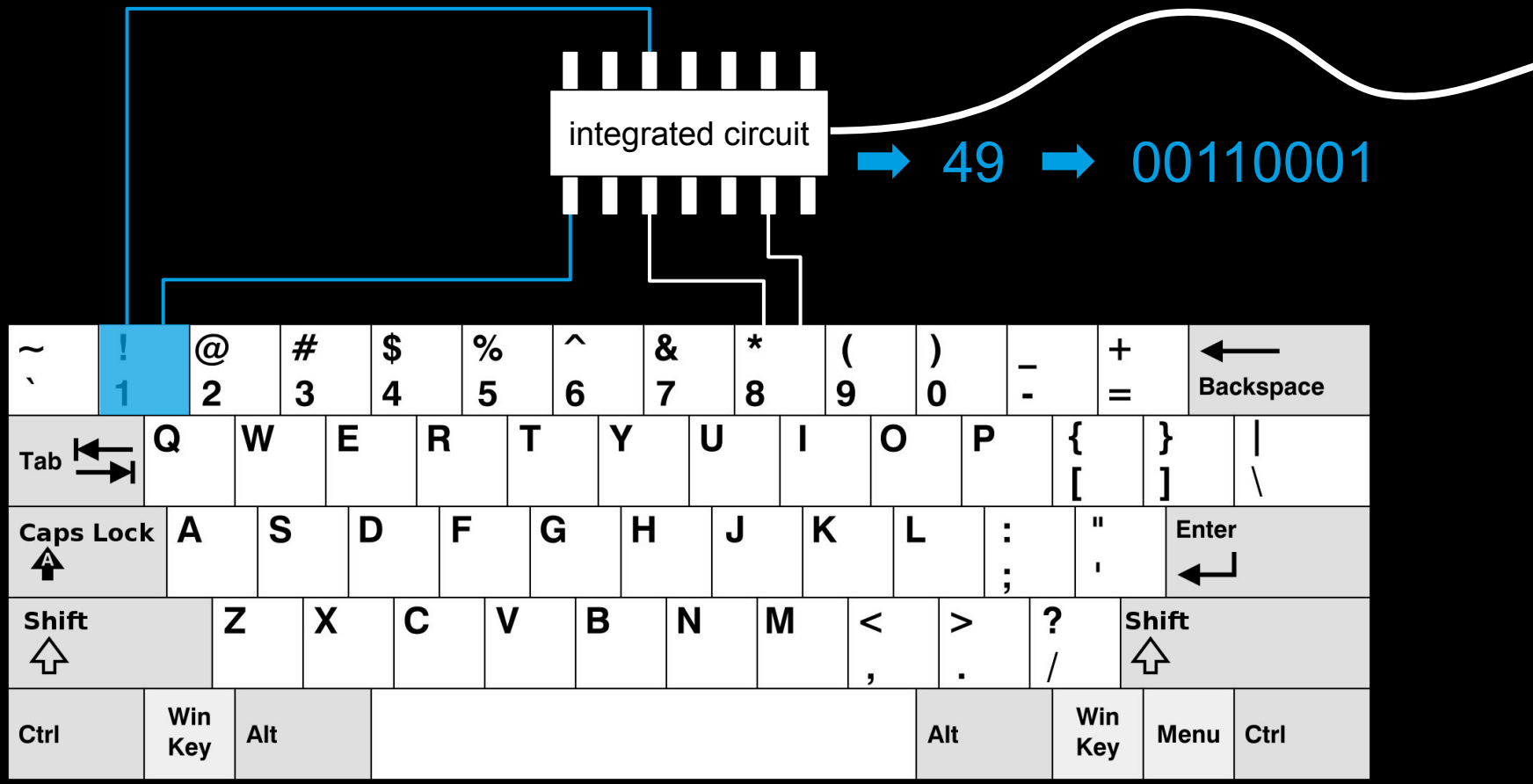

Image source: Wikipedia

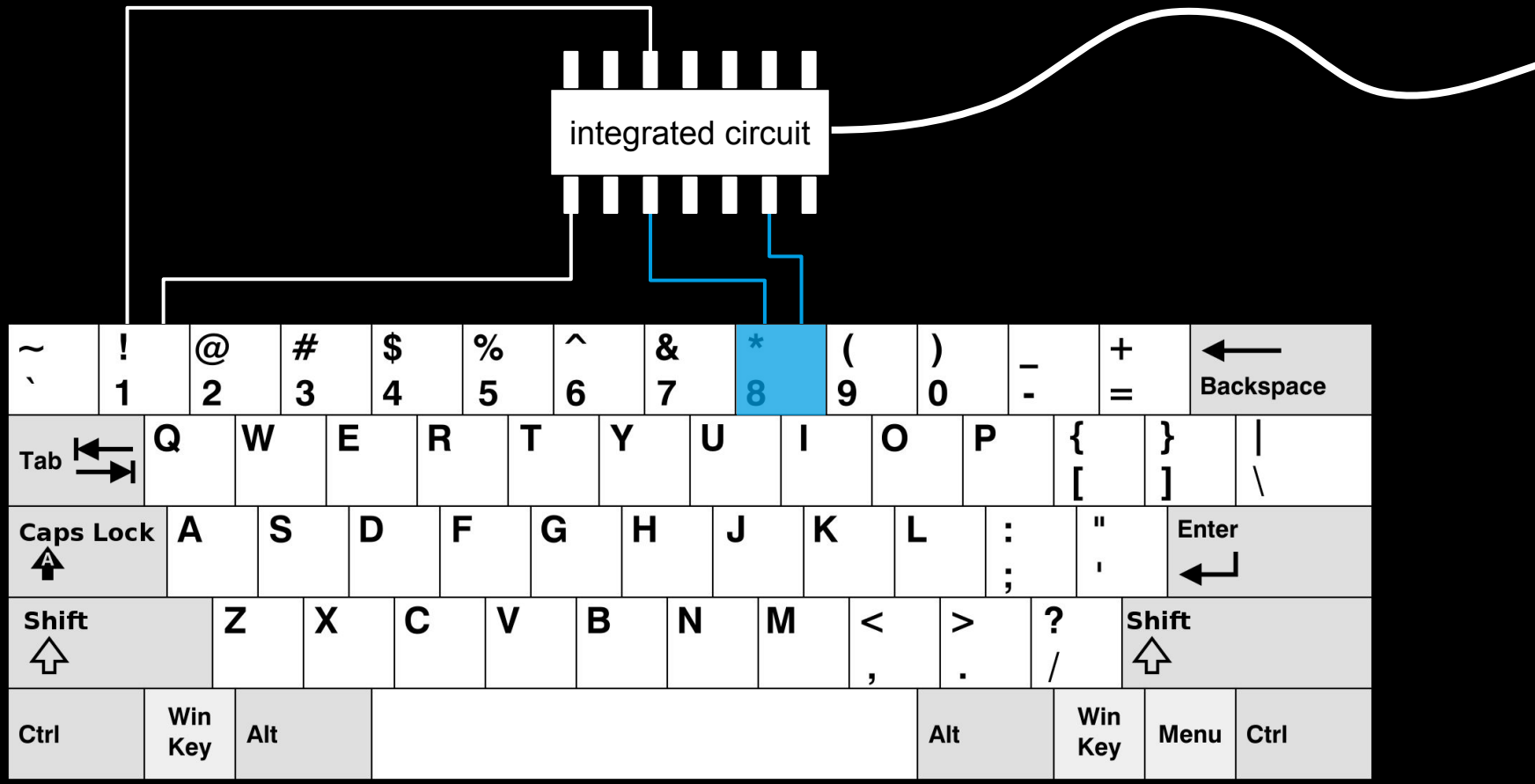

Image source: Wikipedia

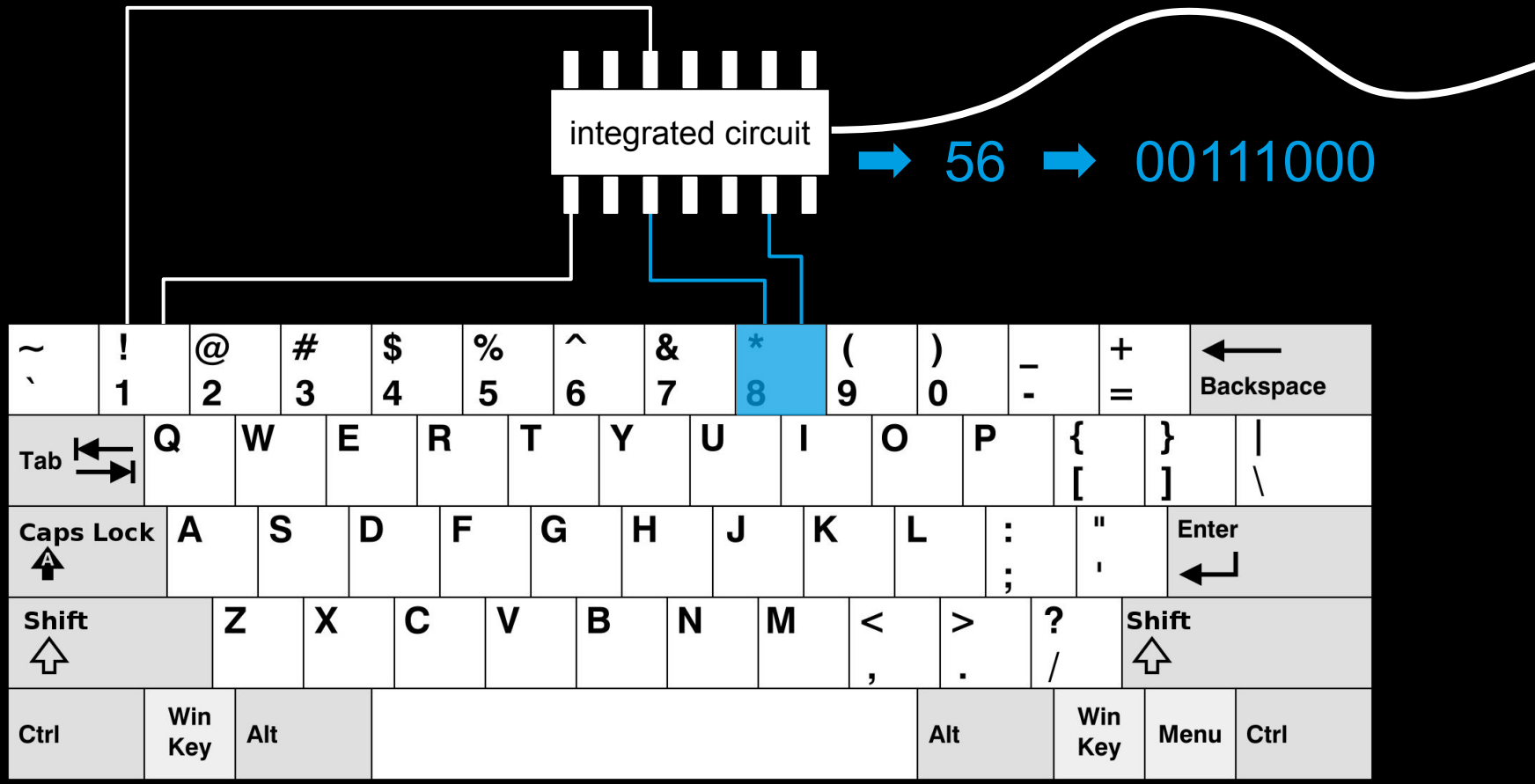

Image source: Wikipedia

scanning text

+

optical character recognition (OCR)

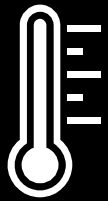

temperature sensor

A thermometer measures the temperature using a proxy, such as electrical resistance. The result is a change in voltage, which can be converted into a temperature.

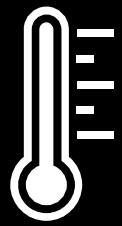

```
1100 0101 1101 1110
1001 0110 1111 0100
0000 0111 1111 0001
```

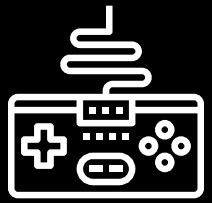

Image source: Wikipedia

Image source: Wikipedia

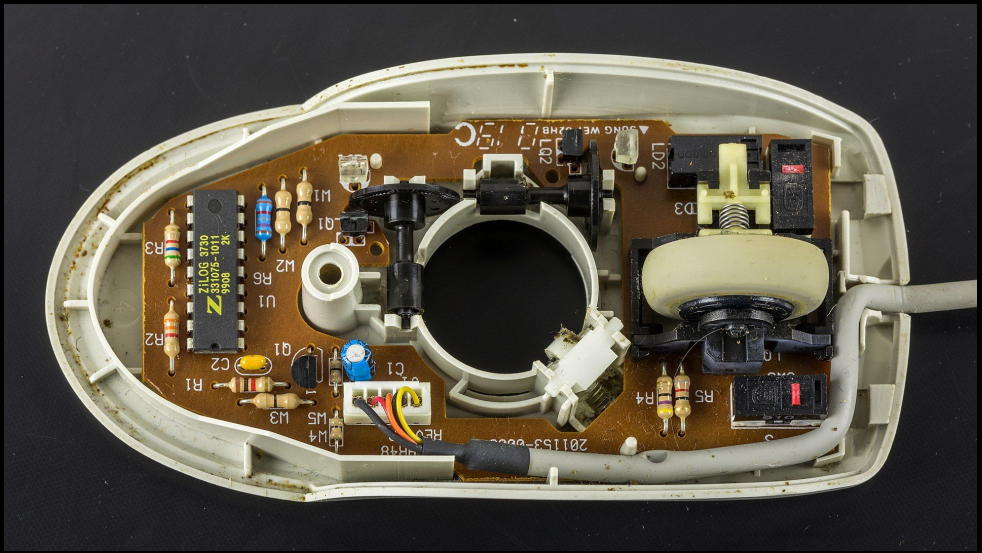

Image source: Wikipedia

Image source: Wikipedia

digital goods

Image source: Wikipedia

Image source: Wikipedia

computer processable

perfect reproduction

non-rival

near-zero costs of reproduction